QH50

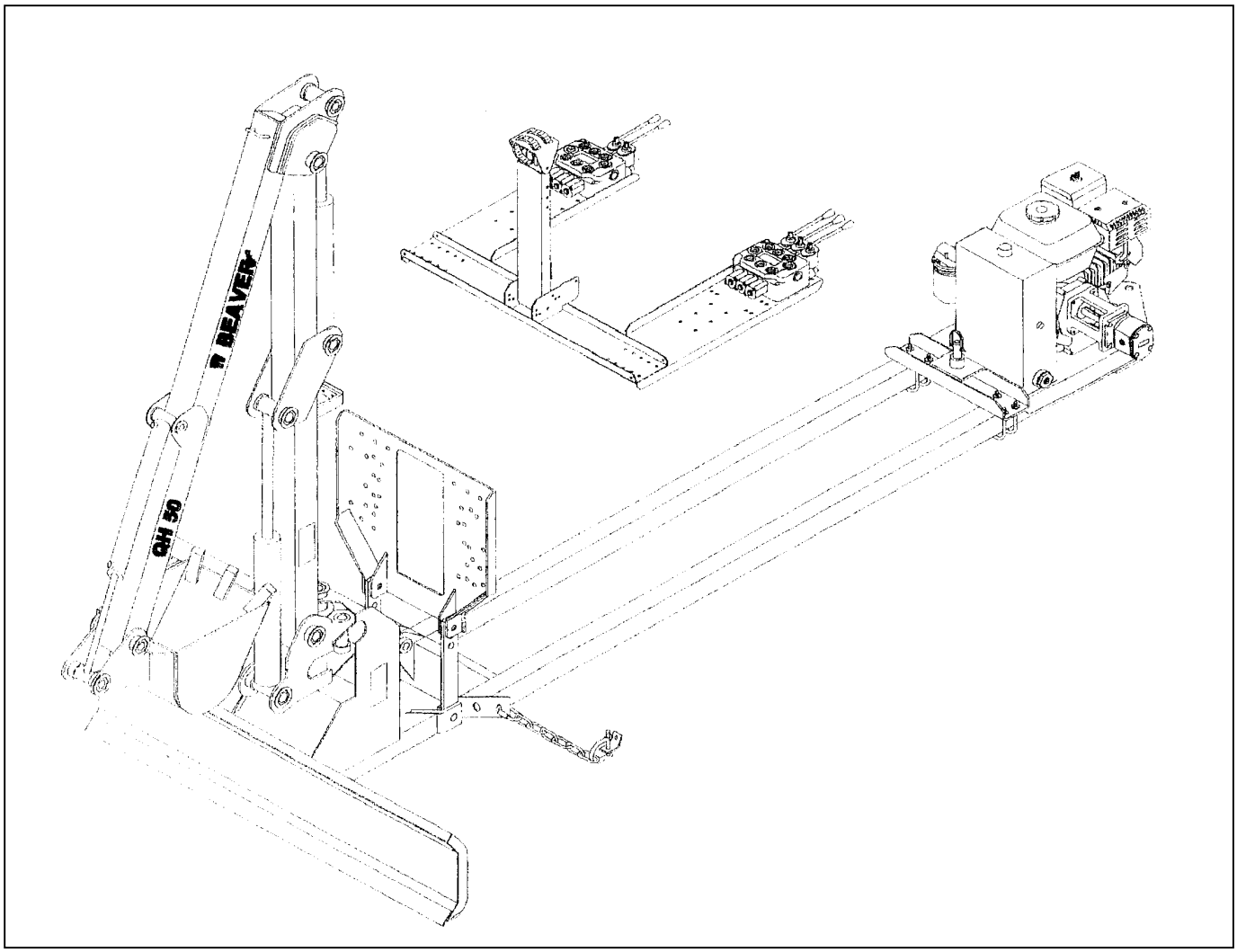

patent pending

Installation operation, maintenance, part book and warranty guide.

WARNING

BEFORE, OPERATING THIS MACHINE, CARE FULLY READ THE FOLLOWING INSTRUCTIONS.

Congratulations on the purchase of your new Beaver Pro QH 50 Excavator, this product was designed and built to give you years of trouble free service and we hope you will enjoy it.

Please fill out the warranty registration card on the last page of this document and fax or mail it TODAY.

TOOLS requires for initial installation:

- Regular wrench and/or socket set up
to 1-1/16"
- Utility knife
- Flat screw driver
- Sheet metal cutter (to uncrate the unit)

1NSTALLATION

1 - Remove all the parts from their packaging, some parts are top heavy therefore be careful when cutting the metal straps.

2- Install the universal mounting plate in front of your ATV (fig.I-1). The bottom of the plate should be between 12" and 14" from the ground. The plate should be level and centered with the ATV bumper. Use the enclosed "I~" bolts, washers and nuts to secure the plate to the bumper, a minimum of two "U" bolts should be installed on the horizontal tubing. This plate was designed to use 2 or 4"IT' bolts, depending on your ATI\7 model, and it is normal to have more "IJ" bolts than needed. The plate should also be vertically level (or close to), note that the plate onl~7, transmits vertical and lateral force to the ATV and that the "forward and reverse" efforts are transmitted to the rear hook up. Supplied vinyl tubing can be cut to length and sliced to be used as a paint protector where the "U" bolt and plate make contact with the bumper/rack.

-- On Polaris ATV's, remove the front plastic bumper (4 bolts) and install the mounting plate with the use the same 4 bolts. Place shims between the plate and the ATV's frame to ensure a perfect fit. For the top two holes, use the 5/16" diameter washer (4) supplied. For the bottom two bolts, use the two sleeves (2) supplied,

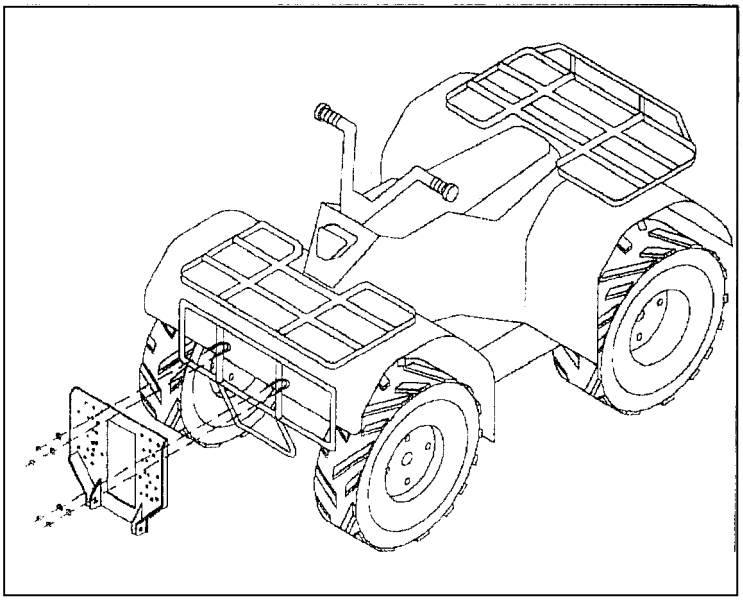

FIG. 1-1

3 -Jackup the front of your ATV and remove the two front wheels. Remove the bolt securing the lower end of shock absorbers (fig.h2) or the upper bolt for Me Person type suspension fig. (1-3). Install the suspension assist brackets using the longer supplied bolts, if needed (Choose the right bolt for your ATV). Note that the shortest end of the bracket is the end used for the bolt. Reinstall the two front wheels and remove the _jack.

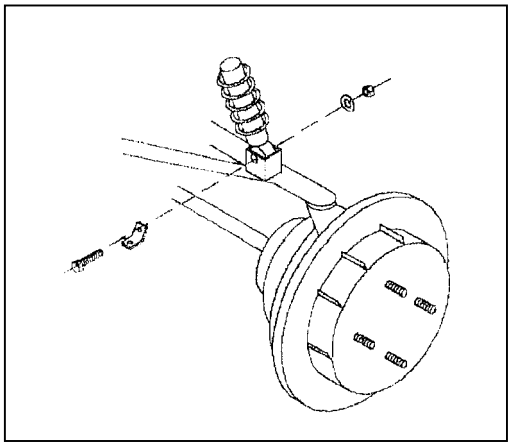

Fig. 1-2

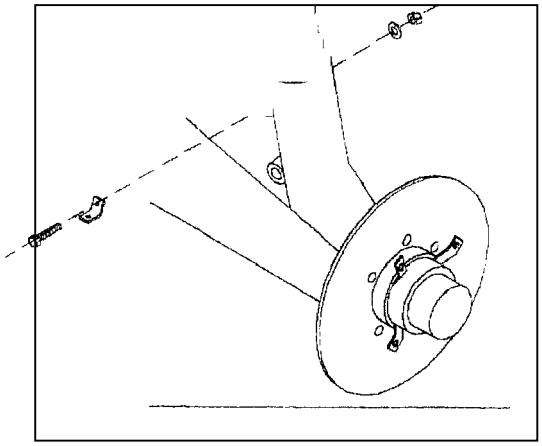

Fig. 1-3

4 - Join the blade assembly to the "under bike" support frame and install the blade lift cylinder (fig. 1-4). Do not over tighten these two bolts, the plastic in the lock nut will prevent them from loosening. Push the two hydraulic hoses in the tubings, they should exit through the rear end of the tubing about 24"

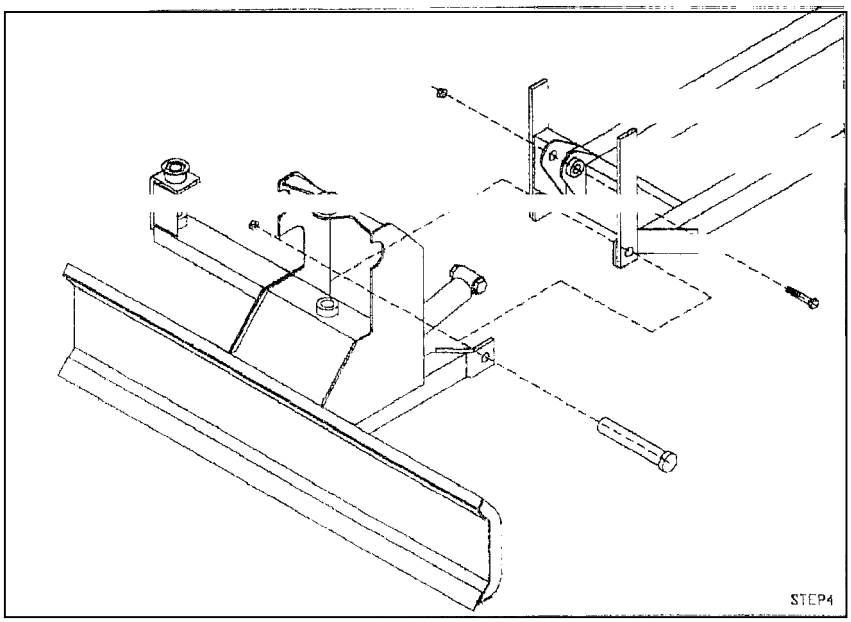

Fig. 1-4

5 - Drive your ATV over the "under bike" bracket, stop the motor and put the transmission in neutral. By hand, position the ATV so that the mounting plate holes align with the "under bike" bracket. Among the 3 different height possibilities, choose the one that positions the blade as level as possible. Push the clevis pins in
the holes and secure them with the clips provided.

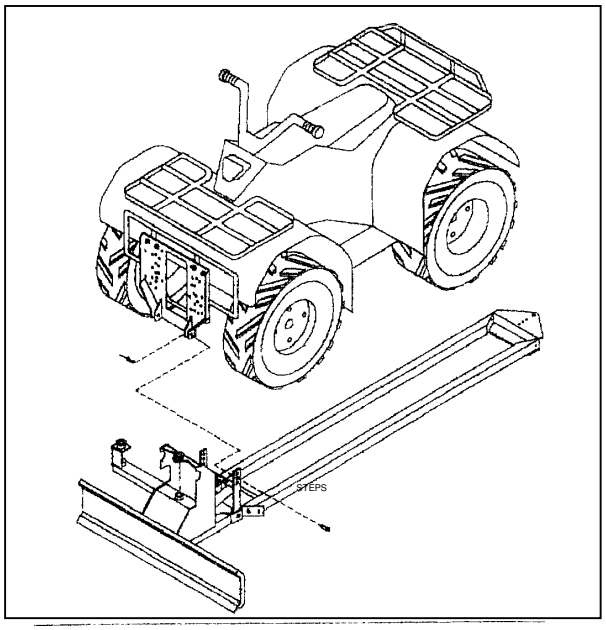

Fig. 1-5

6 - Position the rear cross member over the "under bike" bracket with the pin in line with the trailer ball hole (fig. 1-6). Install the 4 "U" bolts and tight them. Note that on some ATV, shims should be used between the rear cross member and the "under bike" bracket, the flat washer on the trailer ball hole pin could be placed over or tinder the ball plate. The "under bike" bracket should be as high as possible without touching the ATV.

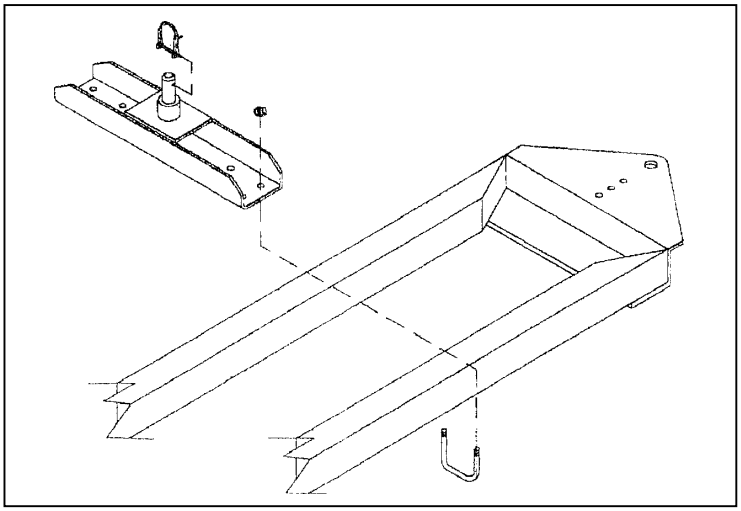

Fig. 1-6

7 - Position the power pack on the "under bike" bracket fig. (1-7) and route the 2 hydraulic hoses through the hole under the pump. Connect those hoses in their respective quick couplers (tie wrap on pressure side), secure the power pack with the 3/8" diameter wing bolt and wing nut through the hole at the rear of the power pack. To determine which of the 3 holes to use, ensure that the flat bar in front of the power pack engage under the rear cross member.

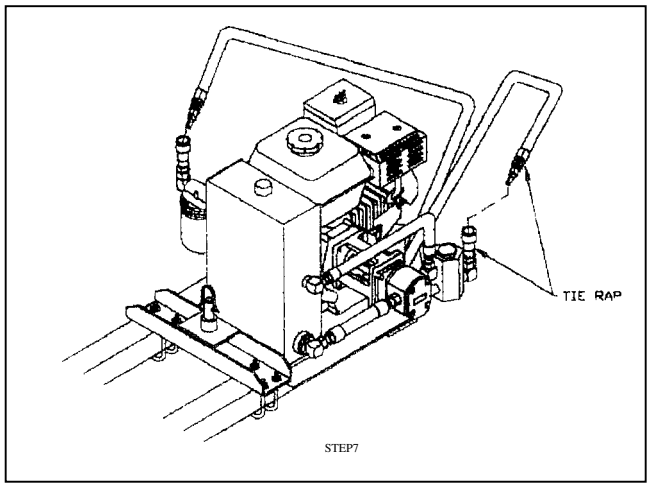

Fig. 1-7

8 - Check the oil levels in the engine and hydraulic oil tanks and fill the gas tank. Start the engine (refer to the engine manual) and let it run for about 2 minutes at about half of it maximum speed. Lower the blade until the ATV front wheels lift from the ground and stop the engine. Attach the suspension assist chains to the bracket installed in step 3. The chains should be as short as possible and the chains surplus should be cut or secured with tie raps to prevent them from touching the axles of your ATV. On some ATV the chains have to he wrapped around the square tubing to allow the chains to be at a more vertical angle, therefore pulling the suspension down.

9 **-** Place the valve brackets assembly over the ATV front rack and secure it with the 1/4"diameter wing bolts treading in the flat bar that you will install under the ATV rack (fig, 1-8). Install split vinyl tubing over the rack tubings that come in contact with the bracket.

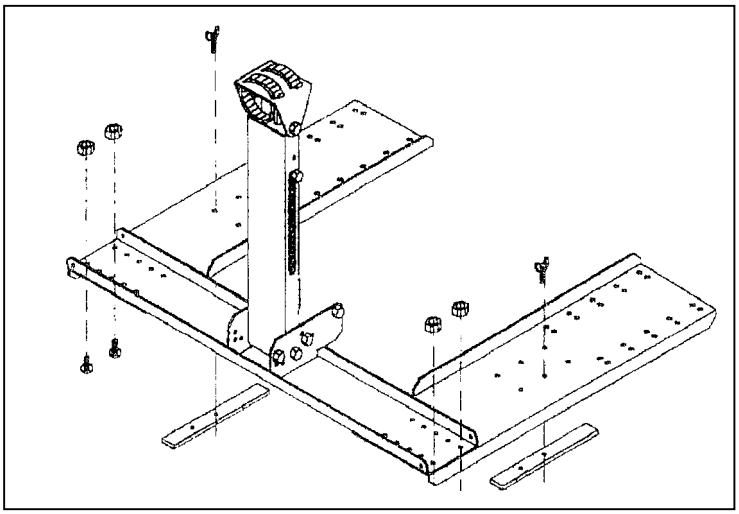

Fig. 1-8

10 - Following the operating instructions, slowly operate the machine and check for any interference with hoses and brackets, adjust if necessary.

11 - Air pressure in the front tires should be increased to compensate for the weight of the excavator.

OPERATION.

- After the daily maintenance/check up have been completed, start the engine.

- Let the engine and hydraulic oil warm up for two minutes at half the engine speed.

- Learn the valve action diagram (stickers on the valve levers).

- Practice in an open area and at a slower engine speed. The engine speed can be increased after you become more accurate with the machine's operation.

⚠ WARNING

- Always check for power, gas and other utility lines buried underground before digging.

- Always keep clear of overhead or aboveground power, gas and other utility lines when operating this machine.

- Keep other people and pets at a safe distance, away from the machine's reach.

- Always have the supporting vehicle hand brake applied when operating the machine.

- Always lower the stabilizing blade and the attachments to the ground when the machine is not in use.

- Always stop the ATV engine and the QH 50 engine before greasing,/servicing.

- Always lower the stabilizing blade to the ground before moving the boom away from the machine.

- Always bring the boom and attachments close to the supporting vehicle before moving the vehicle.

-This machine can considerably alter the handling and stability of the supporting vehicle, drive at very slow speed and negotiate curves and inclines with extreme caution.

- When operating the machine, always keep in mind that it is less stable side ways then it is forward. Therefore be careful not to lift heavy attachment or material from the side.

WARNING

- Never operate the gas engine in a confined space, the exhaust fumes can be deadly.

- Never go or let somebody go into an excavation hole where the wall could collapse.

- Never fuel the engine when it's hot.

- Never excavate near or under the stabilizing blade of the machine.

- The stabilizing blade should not be used to push material at speeds over two miles per hour.

- The machine should not be used to lift people.

- Never operate the machine with the boom and/or attachments above people.

- Never use the machine to lift something too heavy.

- Never drive in water or where the water level could cover the base of the engine.

- Never remove operation/warning stickers from this machine (if they become unreadable, replace them with new ones).

MAINTENANCE

- Refer to the enclosed booklet regarding operating and maintenance instruction of the gas engine.

- This machine should be greased every four hours of operation with chassis grease. (14 grease points)

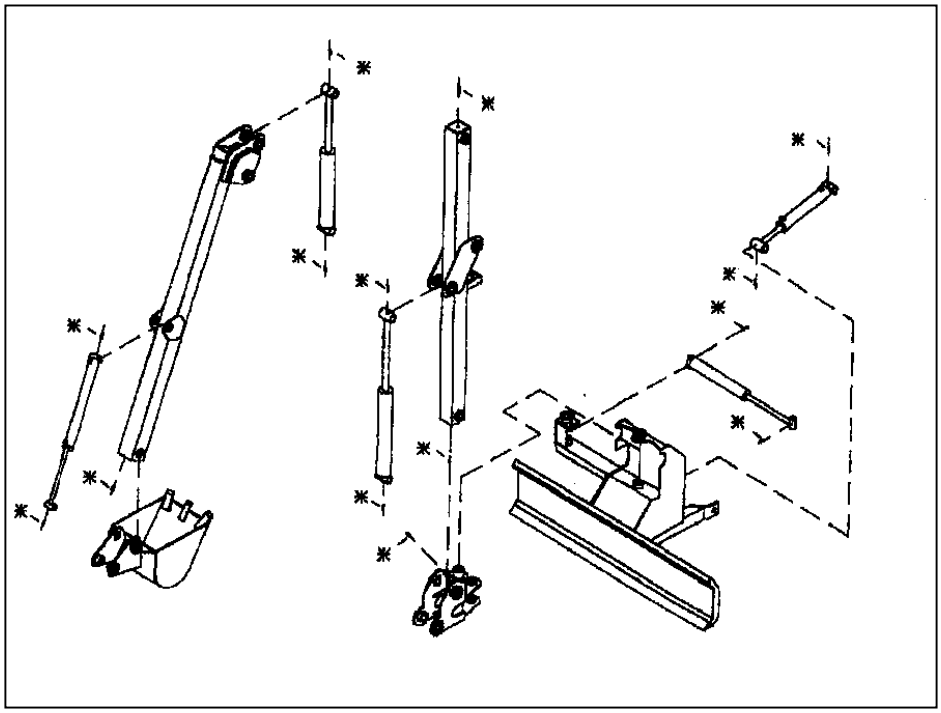

- Engine oil level should he checked every four hours of operation. Refer to the engine maintenance manual.

-Hydraulic; oil level should be checked every four hours of operation. Oil should appear in the sight glass located on side of the hydraulic tank.(#32 hydraulic oil)

- A visual inspection of the complete machine should be made every four hours of operation. Check for loose, broken parts, loose bolts, hydraulic oil leak or any other irregularities.

- The hydraulic; oil filter should be changed after the first 50 hours of use and at every 250 hours after that initial change.

Note that all the bolts that are used as pivot points should not be over tighten, the plastic in the lock nuts will prevent them from loosening.

- In the event of water getting into the hydraulic oil (the hydraulic tank was sunk in water over it's breather cap) drain the complete hydraulic system and refill with new oil. (#32 hydraulic oil).

Note-. In this case the gas engine was probably underwater and the complete unit should be serviced by a professional mechanic.

-The regulation regarding ATV use in your locality should always be respected when using this machine.

LIMITED-WARRANTY

These goods are warranted free from defects in workmanship or/and materials on purchase. If the goods are defective in workmanship or/and materials, they will be repaired or replaced, at the manufacturer's option, without charge to the owner within 90 consecutive days for personal users and 30 days for commercial users. l,.B.N9, will repair or replace, at it's option, components defective in material and/or workmanship under normal use and service, from date of purchase with satisfactory proof of purchase from the vendor and date of purchase, excluding the specific components mentioned in the paragraph below.

This warranty is valid only to the original purchaser of the goods and is void if the goods have been:

- Damaged by negligence or accident after purchase.

- Used other than the purpose for which they are intended to be used or not used in accordance with any operating instructions supplied with the goods.

- Has not been maintained or serviced properly.

OR

- Added on to or used with other goods which may affect the integrity, performance, safety or reliability of these goods.

-This warranty does not cover oil, filters, hydraulic hoses/fittings and normal wear.

This warranty is given in place of all other warranties and assurances, whether express or implied, including but limited to matters of quality, fitness for purpose or merchantability and the vendor accepts no liability, under any circumstances whatsoever, for any consequential damage or loss suffered by anyone as a result of using or being unable to use the goods.

L.B. Manufacturing shall not be responsible for any damage that might occur on the supporting vehicle resulting from the installation and/or use of this product.

SPECIFIC COMPONENT WARRANTY

- Engine is warranty for one year subject to supplier acceptance.
- Pump and valves are warranty for one year subject to supplier acceptance.
- Cylinders excluding seals, are covered by a lifetime warranty subject to supplier acceptance.

Parts claimed under warranty should be sent, properly packed, shipping charge prepaid to:

L.B. Manufacturing
671 Babin Street
Dieppe Industrial Park, NB Canada
ElA SM7
ph: 506-388-3335
fax: 506-388-3325

Parts covered by the warranty will be repaired or replaced at L.B. Manufacturing's or the specific part manufacturer option and sent hack to you by regular postage, paid by LBM.

Parts needed faster then the regular warranty process can be ordered through our parts department, mentioning that it is for warranty purpose. LBM will charge you the part(s) and will issue a credit after acceptance of the warranty claim.

QH50 parts for page C1-1

Boom part list

L1

REFERENCE NUMBER	DESCRIPTION	DESCRIPTION	L.B.M. PART NUMBER / NUMÉRO DE PIECE L.BM.	QUANTITY / QUANTITÉ
1	90° fitting	Raccord 90°	LBM-2016	6
2	Washer	Rondelle	LBM-3870	1
3	Grease nipple	Graisseur	LBM-4015	10
4	Bolt	Boulon	LBM-3160-500	2
5	Lift cylinder	Cylindre de levage	LBM-1004	1
6	Bolt	Boulon	LBM-3160-512	1
7	Nut	Ecrou	LBM-3560	8
8	Bolt	Boulon	LBM-3160-500	1
9	Swing cylinder	Cylindre de rotation	LBM-1005	1
10	Bolt	Boulon	LBM-3170-1200	1
11	Neck		QH50-301-2	1
12	Bolt	Boulon	LBM-3160-1300	1
13	Plow assembly	Ensemble gratte	QH50-201-2	1
14	Bolt	Boulon	LBM-3170-8-**	1
15	Nut	Ecrou	LBM-3570	6
16	Bolt	Boulon	LBM-3170-700	1
17	Grease nipple	Graisseur	LBM-4016	1
18	Boom cylindre	Cylindre du bras	LBM-1006	1
19	Grease nipple	Graisseur	LBM-4017	3
20	Bolt	Boulon	LBM-3170-600	1
21	Nut	Ecrou	LBM-3501	2
22	Hose press	Presse boyau	QH50-417-0	1
23	Bolt	Boulon	LBM-3101-112	2
24	Bolt	Boulon	LBM-3170-700	1
25	Boom	Bras	QH50-401-1	1
26	Stick cylinder	Cylindre d'avant bras	LBM-1115	1
27	Bolt	Boulon	LBM-3170-600	1
28	Bolt	Boulon	LBM-3170-712	1
29	Stick	Avant bras	QH50-501-1	1
30	Bolt	Boulon	LBM-3160-512	1
31	Bolt	Boulon	LBM-3160-700	1
32	Bucket	Godet	QH50-801-0	1
33	Bolt	Boulon	LBM-3160-512	1
34	Bucket cylinder	Cylindre du godet	LBM-1007	1
35	Rubber bumper	Amortisseur	LBM-4029	2
36	Washer	Rondelle	LBM-3810	2
37	Bolt	Boulon	LBM-3208-16	2
38	90° fitting	Raccord 90°	LBM-2005	4

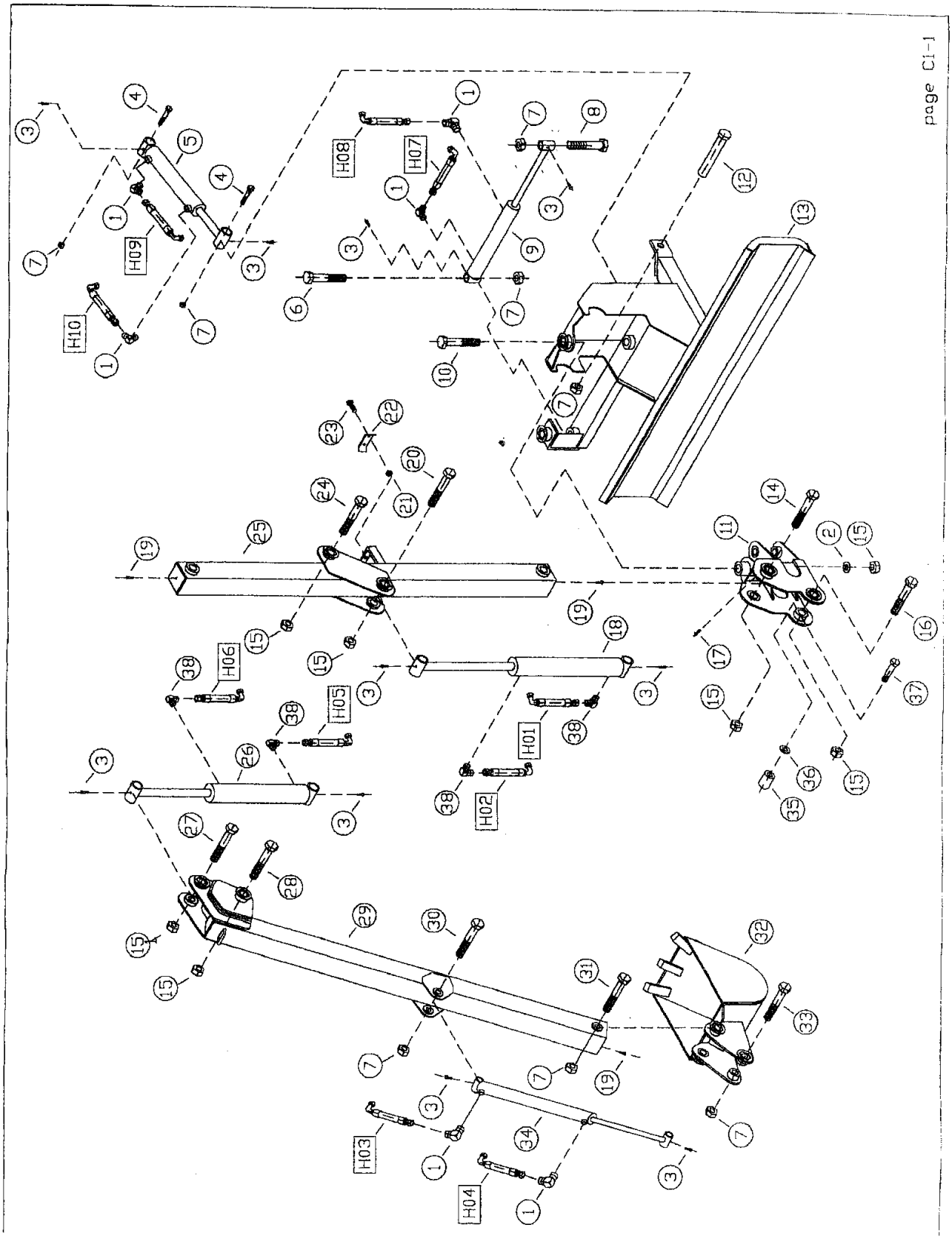
page C1-1
H01
H02
H03
H04
H05
H06
H07
H08
H09
H10

QH50 parts for page C2-1

Frame part list

L2

REFERENCE NUMBER	DESCRIPTION	DESCRIPTION	L.B.M. PART NUMBER / NUMÉRO DE PIECE L.BM.	QUANTITY / QUANTITÉ
1	Gas engine	Moteur	LBM-4018	1
2	Nut	Ecrou	LBM-3510	4
3	Washer	Rondelle	LBM-3810	4
4	Bolt	Boulon	LBM-3110-112	4
5	Bolt	Boulon	LBM-3110-100-F	4
6	Bell housing	Adapteur pompe/moteur	LBM-4019	1
7	Key stock	Barre de blocage	LBM-4020	1
8	Set screw	Vis de blocage	LBM-4021	2
9	Half coupling	Demi accouplement	LBM-4022	1
10	Coupling insert	Caoutchouc d'accouplement	LBM-4023	1
11	Half coupling	Demi accouplement	LBM-4024	1
12	Key stock	Barre de blocage	LBM-4025	1
13	Hydraulic pump	Pompe hydraulique	LBM-1008	1
14	Adapter	Adapteur	LBM-2006	1
15	Adapter	Adapteur	LBM-2007	1
16	Bolt	Boulon	LBM-3110-112	2
17	Washer	Rondelle	LBM-3810	2
18	Nut	Ecrou	LBM-3510	2
19	Rubber plug	Bouchon caoutchouc	LBM-4026	2
20	Female quick coupler	Accouplement rapide femelle	LBM-2008	2
21	Adapter	Adapteur	LBM-2009	1
22	90° fitting	Raccord 90°	LBM-2010	1
23	Relief valve	Soupape de sécurité	LBM-1009	1
24	90° fitting	Raccord 90°	LBM-2011	1
25	90° fitting	Raccord 90°	LBM-2012	1
26	90° fitting	Raccord 90°	LBM-2013	1
27	Strainer	Tamis	LBM-1010	1
28	Drain plug	Bouchon de vidange	LBM-1015	1
29	Wing nut	Ecrou papillon	LBM-4027	1
30	Wing bolt	Boulon papillon	LBM-4028	1
31	Oil level sight glass	Indicateur niveau d'huile	LBM-1111	1
32	Breather/filler cap	Bouchon du réservoir	LBM-1112	1
33	Oil tank and base	Réservoir à l'huile & base	QH50-701-2	1
34	Oil filter	Filtre à l'huile	LBM-1113	1
35	Oil filter head	Tête du filtre à l'huile	LBM-1114	1
36	90° fitting	Raccord 90°	LBM-2014	1

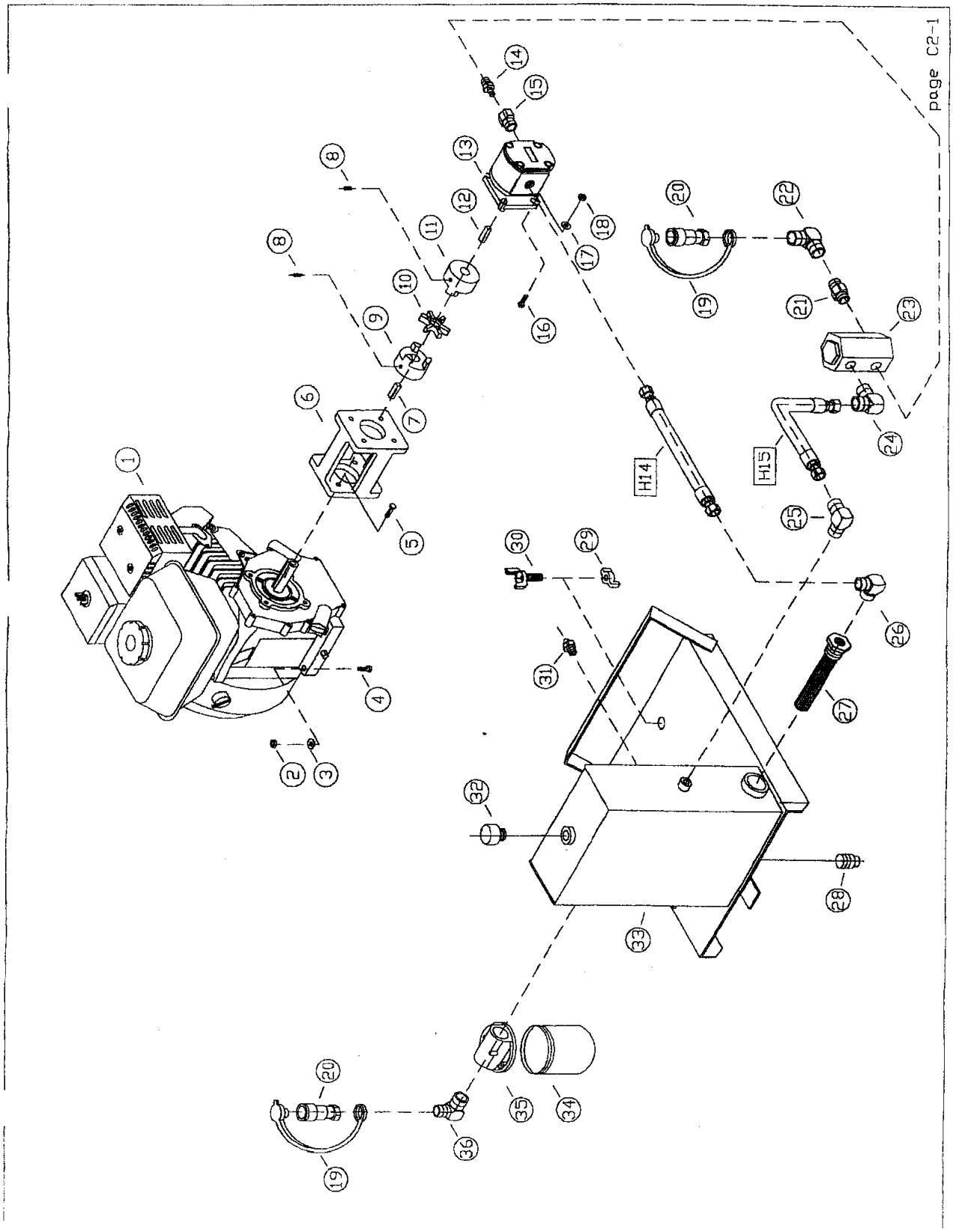
Page C2-1
H14
H15

QH50 parts for page C3-1

Frame part list

L3

REFERENCE NUMBER	DESCRIPTION	DESCRIPTION	L.B.M. PART NUMBER / NUMÉRO DE PIECE L.BM.	QUANTITY / QUANTITÉ
1	Ball hole bracket	Support boule arrière	QH50-610-0	1
2	Pin	Goupille	LBM-1001	1
3	Washer	Rondelle	LBM-3860	2
4	Nut	Ecrou	LBM-3520	8
5	"Under bike" bracket	Support "sous 4 roues"	QH50-601-2	1
6	"U" bolt	Boulon en "U"	LBM-4001	4
7	Nut	Ecrou	LBM-3610 **	2
8	Suspension bracket	Support de suspension	QH50-640-0	2
9	Bolt	Boulon	LBM-3210-50 **	2
10	Shackle	Attache rapide	LBM-4002	2
11	Chain	Chaine	LBM-4003-18	2
12	Fast link	Maille rapide	LBM-4004	2
13	Clip	Goupille rapide	LBM-4006	2
14	Pin	Goupille	LBM-4005	2
15	Protective hose (big)	Boyau protecteur (gros)	LBM-4008-48	1
16	Protective hose (small)	Boyau protecteur (petit)	LBM-4007-48	1
17	Mounting plate	Plaque de montage	Qh50-630-1	1
18	"U" bolt	Boulon en "U"	LBM-4010	4
19	"U" bolt	Boulon en "U"	LBM-4009	4
20	Washer	Rondelle	LBM-3810	8
21	Nut	Ecrou	LBM-3510	8

** May be different for your ATV.

MISC. PARTS DIVERS	DESCRIPTION	DESCRIPTION	L.B.M. PART NUMBER / NUMÉRO DE PIECE L.BM.	QUANTITY / QUANTITÉ
HD	Hydraulic oil	Huile hydraulique	HD32	1 L
Paint	Blue paint	Peinture bleue	Paint	spray can
Sticker	Sticker	Etiquette	Specify	
Protection	Hose protector	Protège tuyau		4 feet

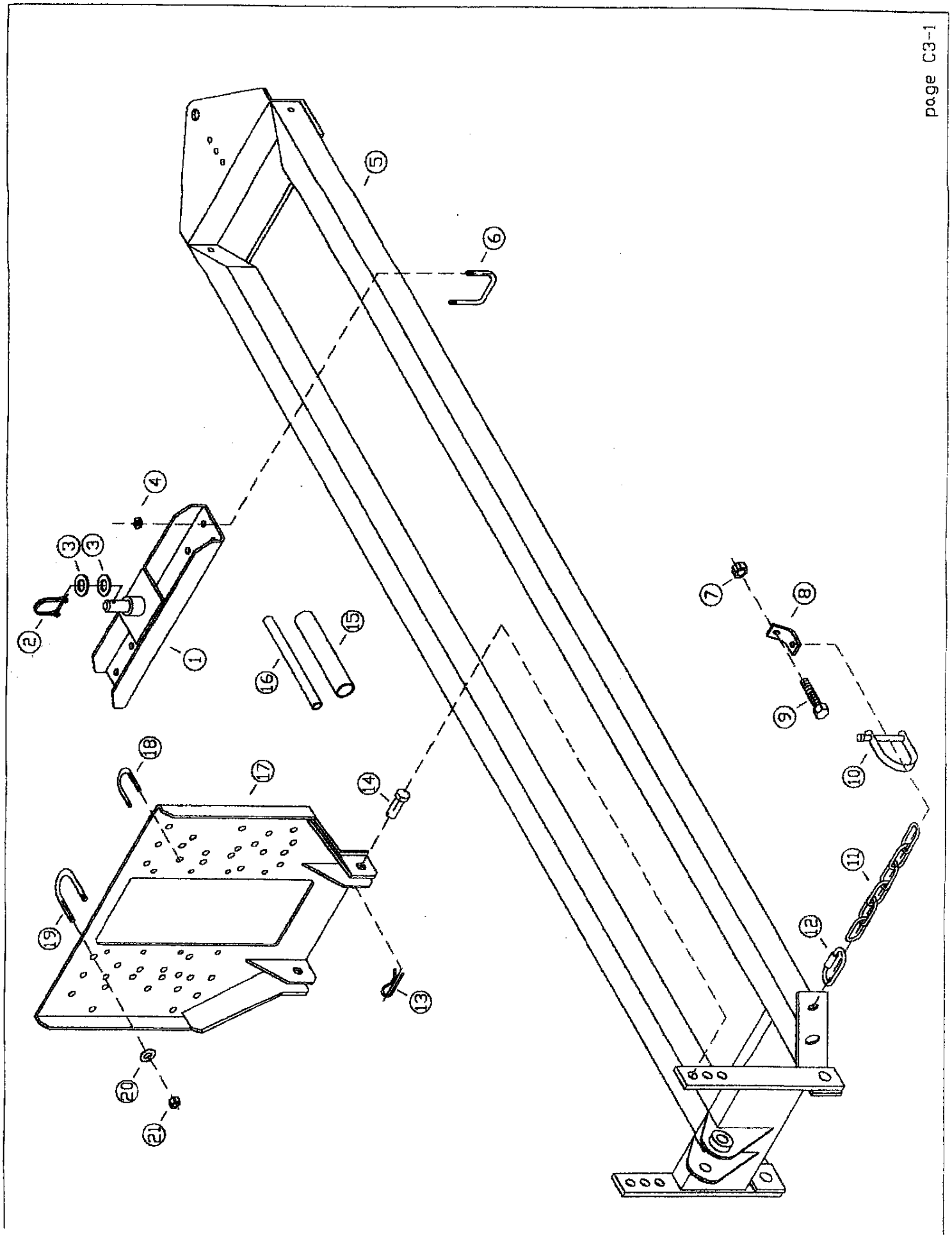
page C3-1
1
2
3
3
4
5
6
7
8
9
10
11
12
13
14
15
16
17
18
19
20
21

QH50 parts for page C4-1
Valve/Hose support part list

L4

REFERENCE NUMBER	DESCRIPTION	DESCRIPTION	L.B.M. PART NUMBER / NUMÉRO DE PIECE L.BM.	QUANTITY / QUANTITÉ
1	Valve	Valve	LBM-1002	1
2	Bolt	Boulon	LBM-3301-150	4
3	Nut	Ecrou	LBM-3401	8
4	Sticker bracket I	Support à étiquette I	QH50-642-0	3
5	Sticker bracket II	Support à étiquette II	QH50-641-0	2
6	Bolt	Boulon	LBM-3110-214	4
7	Nut	Ecrou	LBM-3510	4
8	Valve support (left)	Support de valve (gauche)	QH50-625-1-L	1
9	Rack holder	Support du cadre	QH50-626-0	2
10	Bolt	Boulon	LBM-3101-400	4
11	Wing bolt	Boulon papillon	LBM-4012	2
12	Nut	Ecrou	LBM-3501	16
13	Middle rack	Cadre central	QH50-620-0	1
14	Bolt	Boulon	LBM-3101-412	2
15	Bushing	Coussinet	LBM-4013	4
16	Spring	Ressort	LBM-4014	1
17	Hose support	Support à boyau	QH50-623-0	1
18	Clamp	Serre boyau	LBM-4011	2
19	Hose holder	Reteneur de boyau	QH50-624-0	1
20	Valve	Valve	LBM-1003	1
21	Valve support (right)	Support de valve (droit)	QH50-625-1-R	1
22	Bolt	Boulon	LBM-3120-038	5

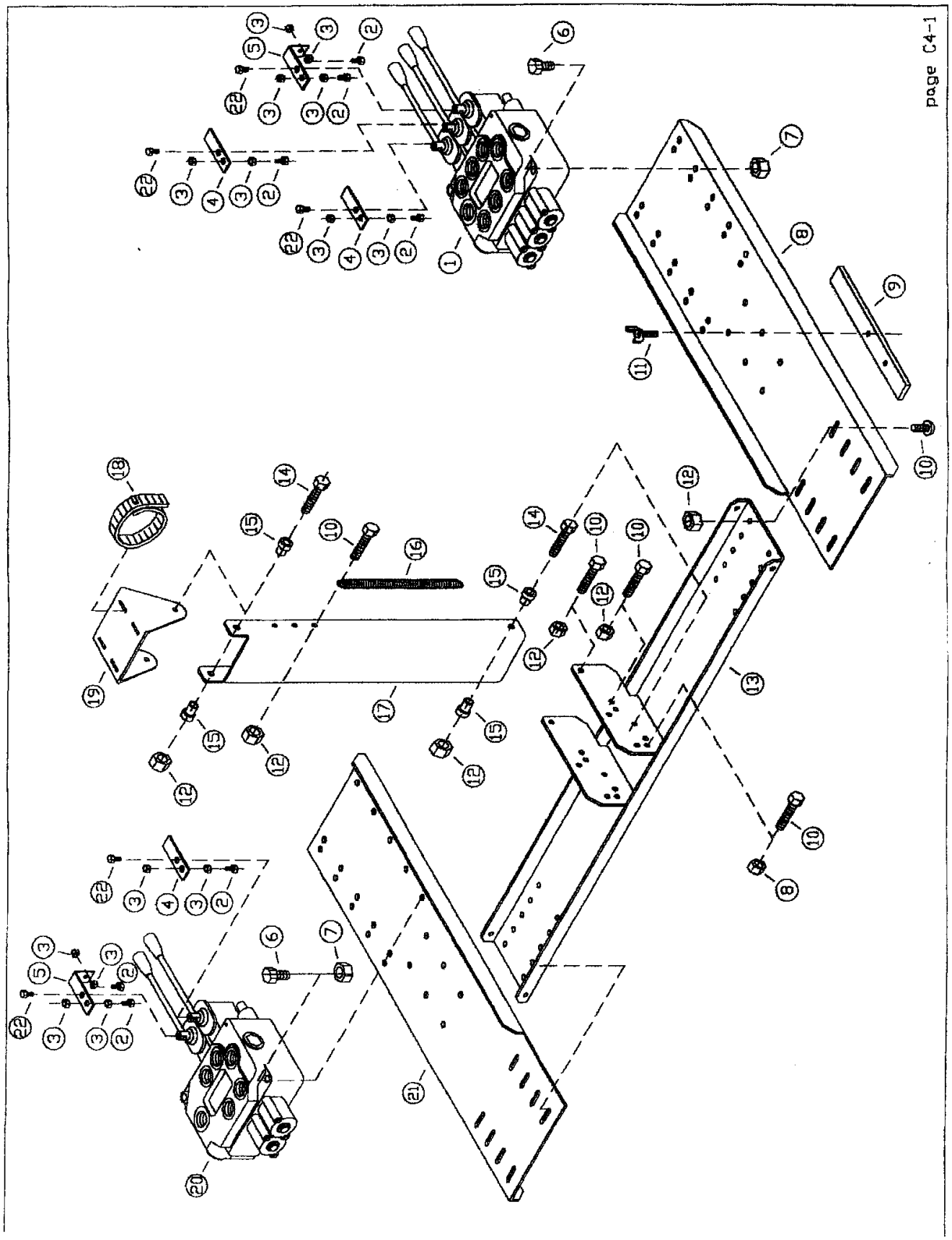
page C4-1

QH50 parts for page C5-1
Valve part list

L5

REFERENCE NUMBER	DESCRIPTION	DESCRIPTION	L.B.M. PART NUMBER NUMÉRO DE PIECE L.BM.	QUANTITY QUANTITÉ
1	Adapter	Adapteur	LBM-2001	10
2	90° fitting	Raccord 90°	LBM-2002	2
3	90° fitting	Raccord 90°	LBM-2003	2
4	Male quick coupler	Accouplement rapide male	LBM-2004	2
H01	Hydraulic hose	Boyau hydraulique	H01	1
H02	Hydraulic hose	Boyau hydraulique	H02	1
H03	Hydraulic hose	Boyau hydraulique	H03	1
H04	Hydraulic hose	Boyau hydraulique	H04	1
H05	Hydraulic hose	Boyau hydraulique	H05	1
H06	Hydraulic hose	Boyau hydraulique	H06	1
H07	Hydraulic hose	Boyau hydraulique	H07	1
H08	Hydraulic hose	Boyau hydraulique	H08	1
H09	Hydraulic hose	Boyau hydraulique	H09	1
H10	Hydraulic hose	Boyau hydraulique	H10	1
H11	Hydraulic hose	Boyau hydraulique	H11	1
H12	Hydraulic hose	Boyau hydraulique	H12	1
H13	Hydraulic hose	Boyau hydraulique	H13	1

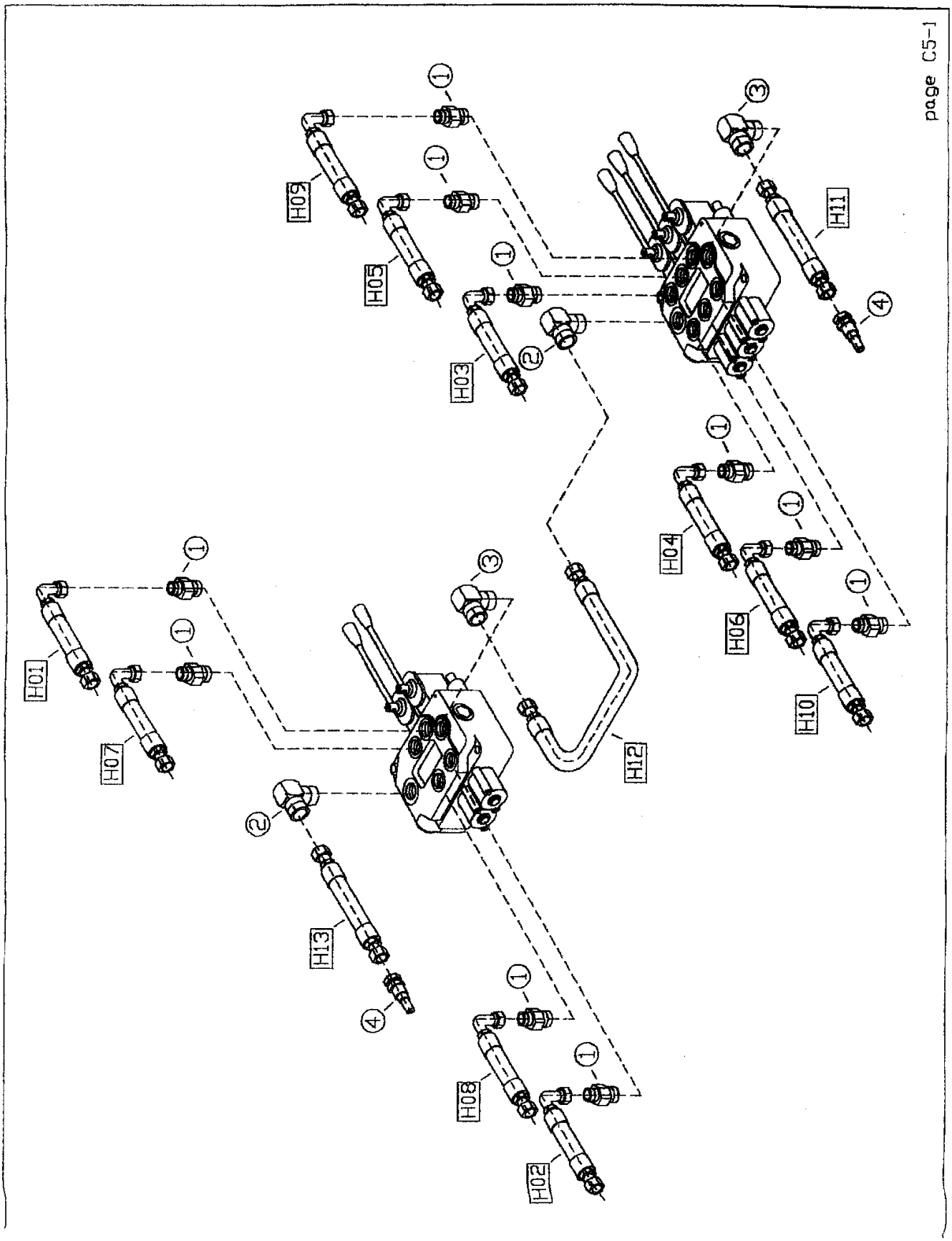
page C5-1
H01
H02
H03
H04
H05
H06
H07
H08
H09
H10
H11
H12
H13
1
2
3
4

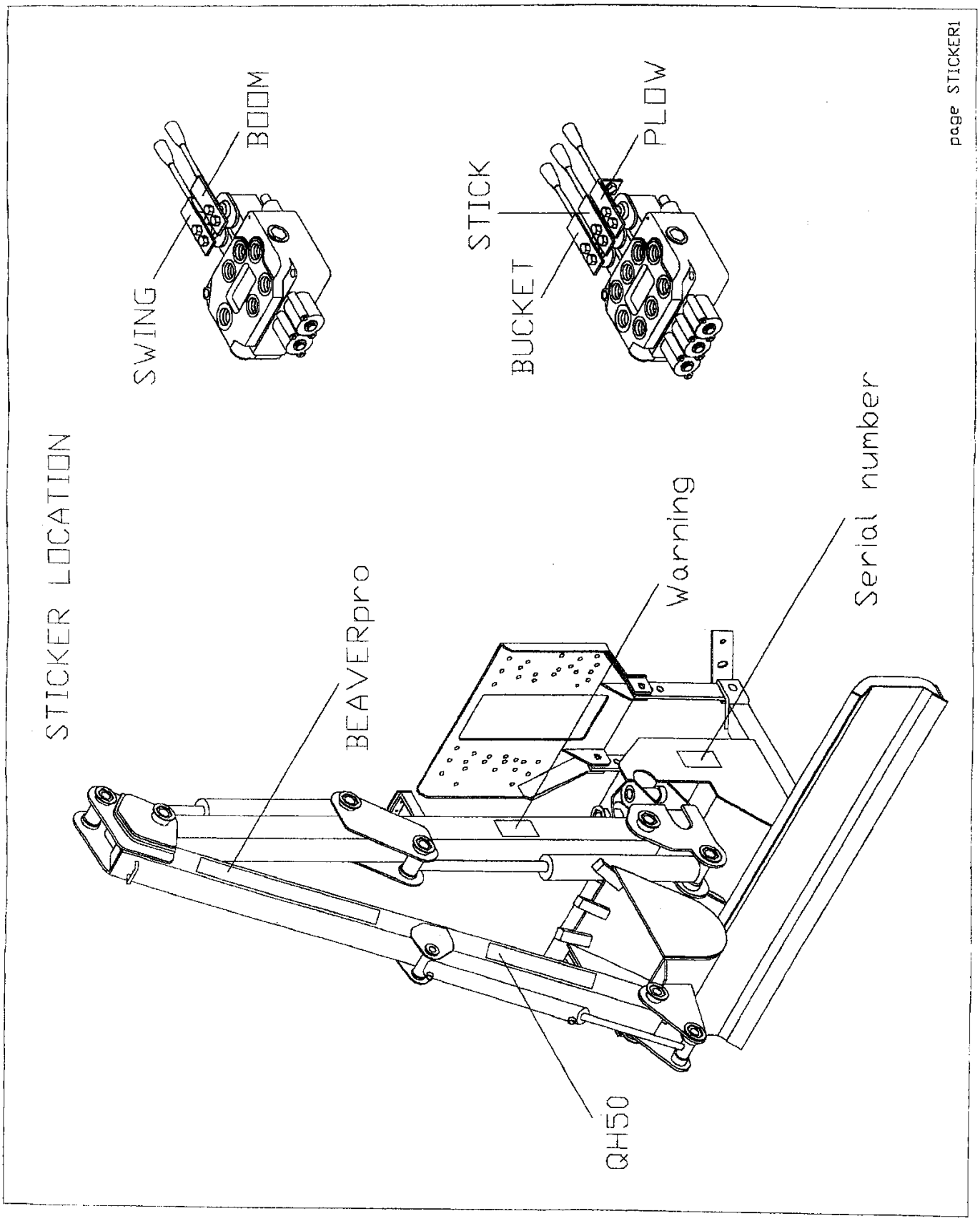
STICKER LOCATION
SWING
BOOM
BUCKET
STICK
PLOW
BEAVERpro
Warning
Serial number
QH50
page STICKER1

WARRANTY REGISTRATION CARD

QH 50

Serial number:_____
Date purchased: _____
Name of dealer:_____
Owner information Name:_____

Address: _____

Phone:_____

Customer type: Individual_____or Commercial_____

Optional information

Brand / Model of ATV:_____

Where did you first hear about the QH 50: , ____Dealer advertising (including internet)
____Seen one and inquired about it
____L.B. Manufacturing / Beaver Pro Web site
____Other

Fax this card to : 1-506-388-3325 or mail it to:

L.B. Manufacturing
671 Babin Street
Dieppe Industrial Park, NB
ElA 5M7
ph 506-388-3335

By returning this card, you state that you have read and understand the content of this information package.

Comments:_____

_____

_____

_____